VEZ-A2-PW Pipe Mount

www.boschsecurity.com

BOSCH
Invented for life

- Hollow core for cable-free appearance
- Tough 4-bolt anchoring
- Anti-rust treated

Installation/configuration notes

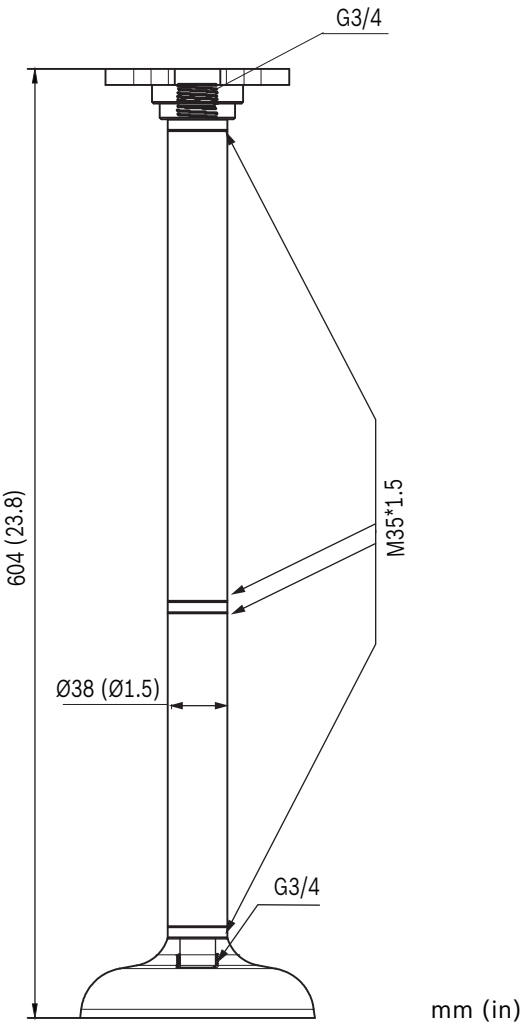

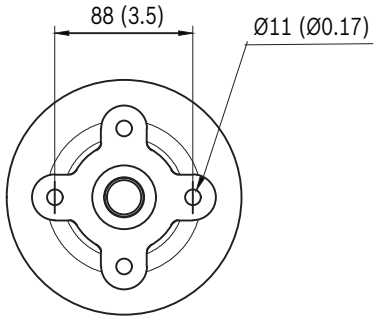

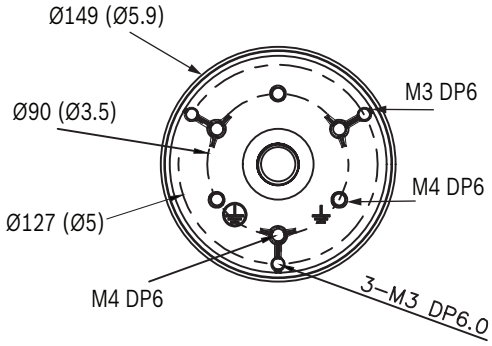

Parts included

The packaging contains:

	Item
1x	Mount
	Attachment components

Technical specifications

Construction material	Aluminum alloy
Finish	RAL 9003 signal white

Ordering information

VEZ-A2-PW Pipe Mount
Pendant pipe mount (Ø145/149 mm) for dome cameras (use together with appropriate dome adapter bracket); white
Order number **VEZ-A2-PW**

Represented by:

Americas:
Bosch Security Systems, Inc.
130 Perinton Parkway
Fairport, New York, 14450, USA
Phone: +1 800 289 0096
Fax: +1 585 223 9180
security.sales@us.bosch.com
www.boschsecurity.us

Europe, Middle East, Africa:
Bosch Security Systems B.V.
P.O. Box 80002
5617 BA Eindhoven, The Netherlands
Phone: + 31 40 2577 284
Fax: +31 40 2577 330
emea.securitysystems@bosch.com
www.boschsecurity.com

Asia-Pacific:
Robert Bosch (SEA) Pte Ltd, Security Systems
11 Bishan Street 21
Singapore 573943
Phone: +65 6571 2808
Fax: +65 6571 2699
apr.securitysystems@bosch.com
www.boschsecurity.asia

China:
Bosch (Shanghai) Security Systems Ltd.
203 Building, No. 333 Fuquan Road North IBP
Changning District, Shanghai
200335 China
Phone +86 21 22181111
Fax: +86 21 22182398
www.boschsecurity.com.cn

America Latina:
Robert Bosch Ltda Security Systems Division
Via Anhanguera, Km 98
CEP 13065-900
Campinas, Sao Paulo, Brazil
Phone: +55 19 2103 2860
Fax: +55 19 2103 2862
latam.boschsecurity@bosch.com
www.boschsecurity.com

© Bosch Security Systems 2016 | Data subject to change without notice
2454889995 | en, V6, 20. Jan 2016